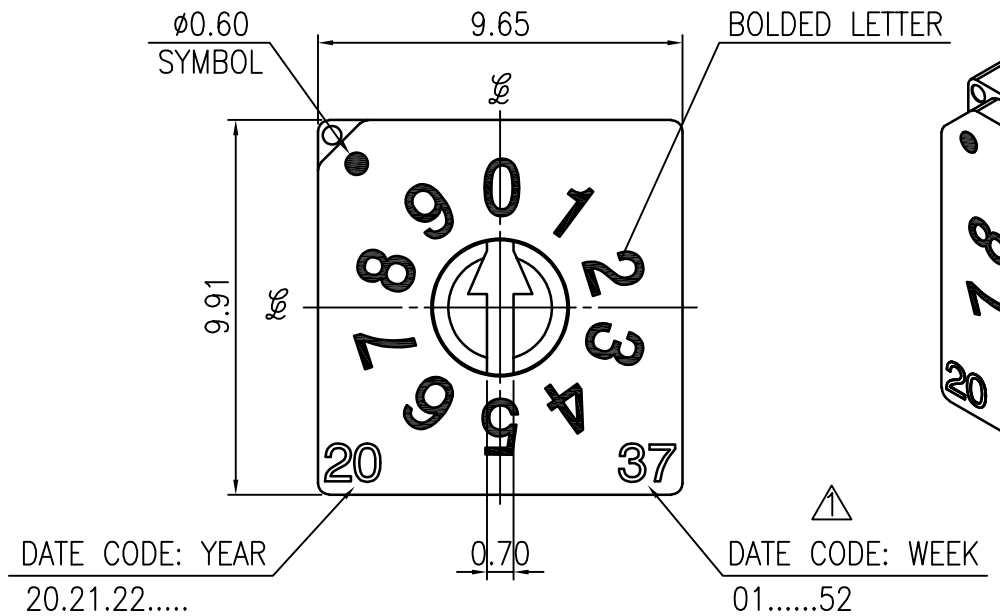

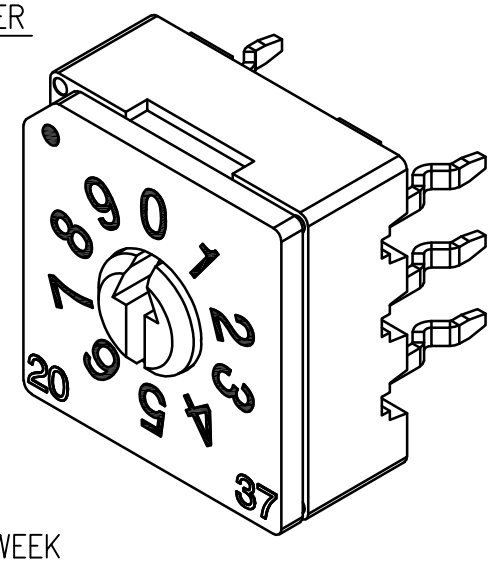

SPECIFICATIONS:
1.MAXIMUN RATING: 24VDC. 25mA.
2.MINIMUN RATING: 3.5VDC. 10μA.
■3.CONTACT RESISTANCE: 200mΩ MAX.
4.INSULATION RESISTANCE: 250VDC–100MΩ MIN.
5.WITHSTAND VOLTAGE: 250VAC–1 MINUTE
■6.ROTARY TORQUE: 350gf.cm MAX.
7.TOTAL ROTARY ANGLE: 360° (10 STEPS)
8.LIFE CYCLE: 20,000 STEPS

■ CIRCUIT CHART

		CODE				
		C	1	2	4	8
10 POSITIONS	0	●				
	1	●	●			
	2	●		●		
	3	●	●	●		
	4	●			●	
	5	●	●		●	
	6	●		●	●	
	7	●	●	●	●	
	8	●				●
	9	●	●			●

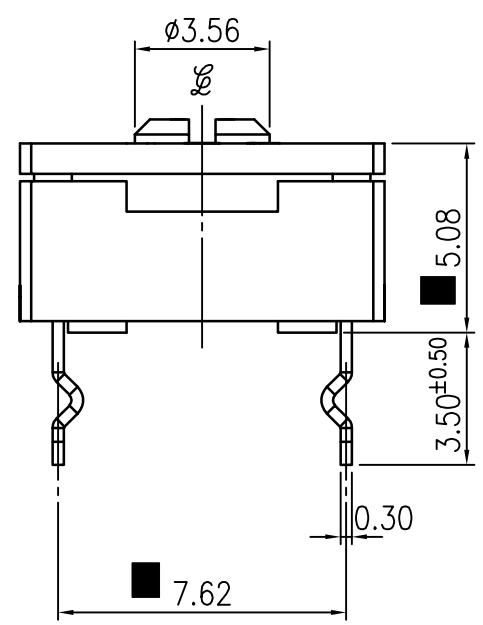

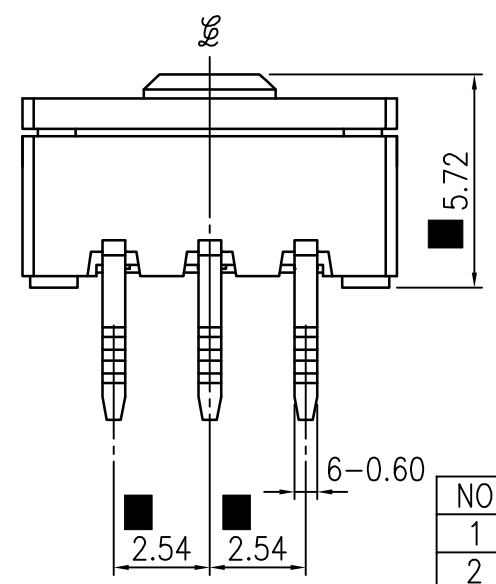

P.C.B. LAYOUT

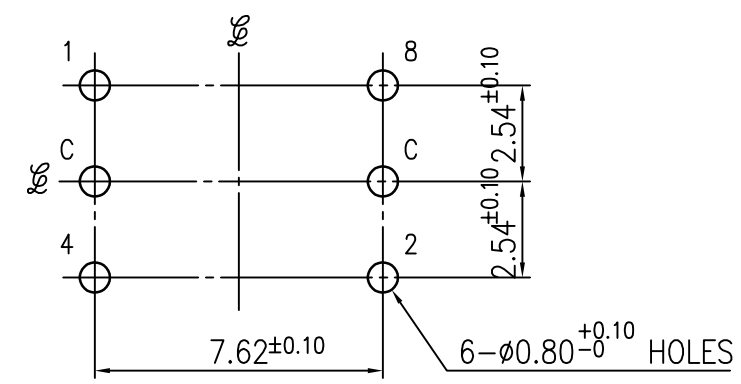

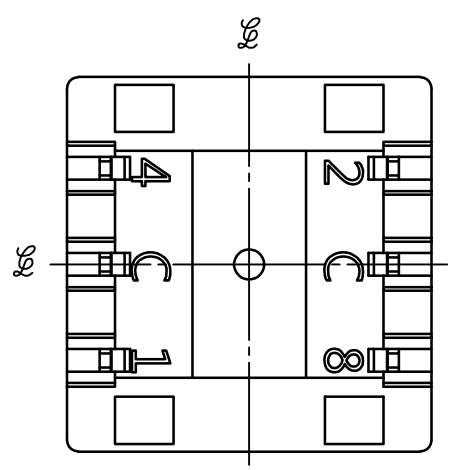

NO.	PART NAME	MATERIAL	Q'TY	FINISHING
1	FRAME	PA+G	1	
2	COVER	PA+G	1	
3	SPRING PLATE	SUS	1	
4	ROTOR	PA+G	1	RED COLOR
5	TERMINAL	BRASS	6	Au/Sn PLATED
6	CONTACT PLATE	COPPER ALLOY	1	Au PLATED
7	O–RING	SILICONE RUBBER	1	
8	SPACER	SUS	1	

SYM	DISCRIPTION	DATE	APPROVED
△			
△			
△			
△			
⚠	增加DATE CODE	2020.12.03	Austin

Horustech

HORUSTECH ELECTRONICS CO., LTD.

TOLERANCES UNLESS OTHERWISE SPECIFIED
LINEAR: ±0.30 ANGULAR: ±3°

REVISIONS A1 | SCALE 5/1

SIGNATURES	DATE
DRAWN	
CHK'D	
APPV'D	

TITLE: ROTARY SWITCH

NO. RSF–ZARKR